DWG No	REV
	0

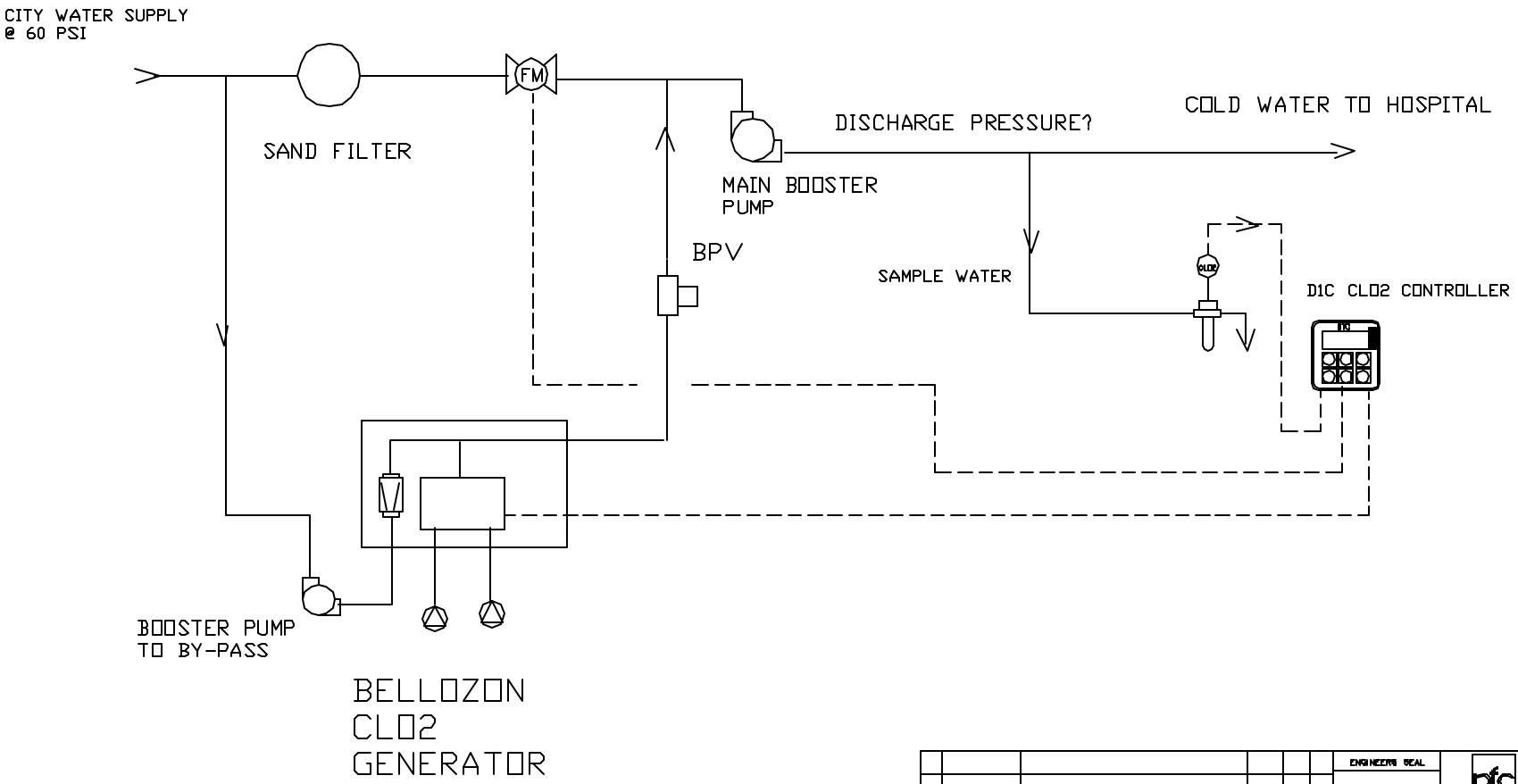

REV	DATE	DESCRIPTION	BY	APPD	REVD
0	09-29-05	FIRST ISSUE	AT		

REVISIONS

CUSTOMER

JOB No | PURCHASE ORDER No

TITLE: COLD WATER FLOW DIAGRAM

ENGINEERS SEAL

THIS DRAWING IS THE PROPERTY OF PROMINENT FLUID CONTROLS INC. AND SHALL NOT BE COPIED OR TRANSFERRED WITHOUT THE WRITTEN CONSENT OF PROMINENT FLUID CONTROLS INCORPORATED.

ProMinent®
THE PROMINENT GROUP OF COMPANIES

PITTSBURGH, PA USA WWW.PROMINENT.CC

PROMINENT FLUID CONTROLS LTD.
495 SOUTHGATE DRIVE,
GUELPH, ONTARIO, CANADA
N1H 6J3
TEL: 519 824 8492 FAX: 519 824 8224

PROMINENT FLUID CONTROLS, INC.
1100 PARK WEST
136 INDUSTRY DRIVE
PITTSBURGH, PA 15275 USA
TEL: 412 787 2484 FAX: 412 787 6784

DESIGNED	AT	APPROVED	
DRAWN	AT	SCALE	NTS
CHECKED	AT	DATE	09-29-05

DWG No | REV 0 | PAGE 001