DWG No	REV
1028806-400	A

PLAN VIEW

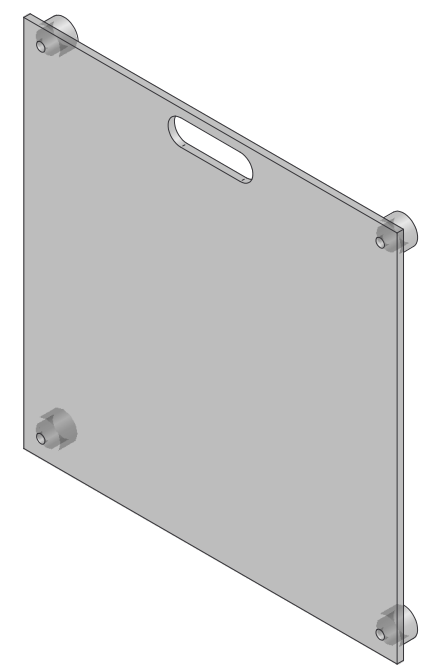

FRONT ISOMETRIC VIEW

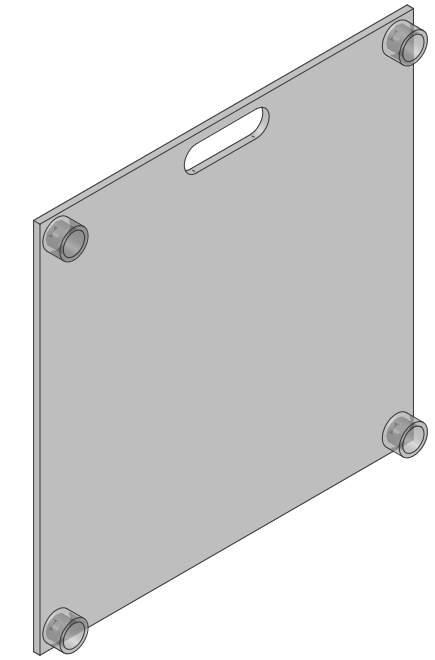

REAR ISOMETRIC VIEW

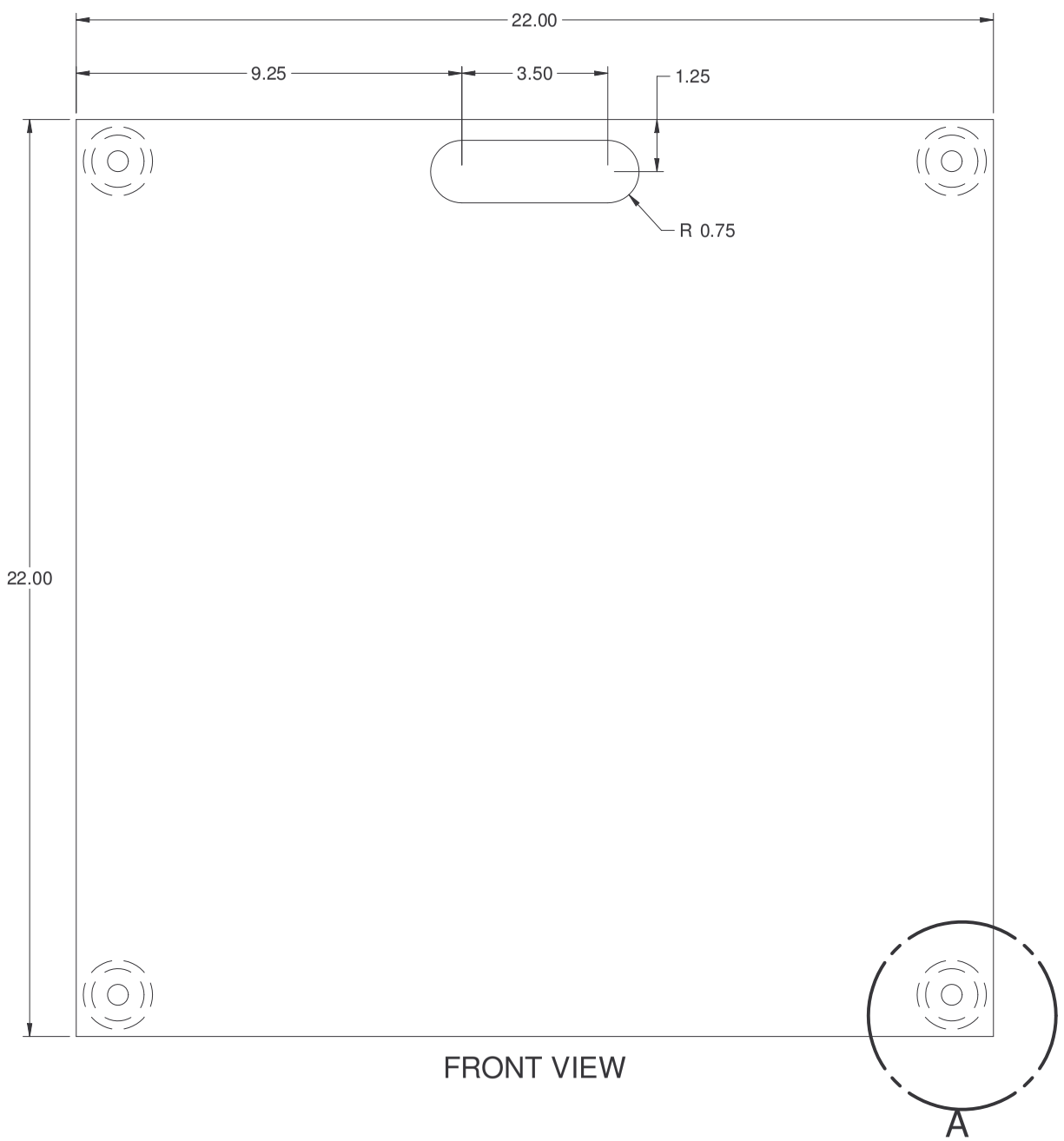

FRONT VIEW

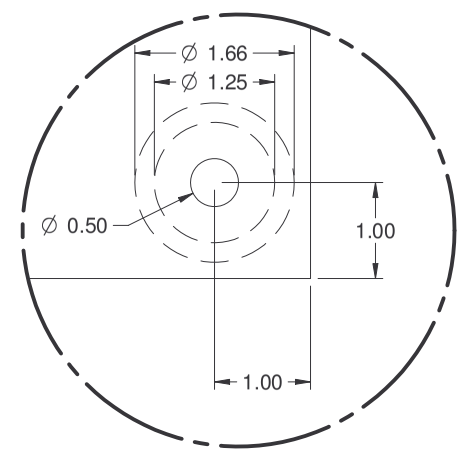

DETAIL A

SPACER DETAIL
4 PLACES TYP.

NOTES:

1. PANEL MATERIAL: UV PROTECTED BLACK POLYPROPYLENE.

REV	DATE	DESCRIPTION	BY	APPD	REVD
A	05/25/10	REVISED MOUNTING LEGS	JDB		
0	10/09/06	FIRST ISSUE	GJS		

REVISIONS

CUSTOMER PROMINENT FLUID CONTROLS INC. (STANDARD PRODUCT)

JOB No 1028806 | PURCHASE ORDER No

TITLE D1C BLACK PP 22" X 22" WALL PANEL FABRICATION DRAWING

THIS DRAWING IS THE PROPERTY OF PROMINENT FLUID CONTROLS INC. AND SHALL NOT BE COPIED OR TRANSFERRED WITHOUT THE WRITTEN CONSENT OF PROMINENT FLUID CONTROLS INC.

ENGINEERS SEAL

pfc ProMinent

ProMinent®
THE PROMINENT GROUP OF COMPANIES

PITTSBURGH, PA USA | WWW.PROMINENT.US

PROMINENT FLUID CONTROLS LTD.
490 SOUTHGATE DRIVE.
GUELPH, ONTARIO, CANADA
N1H 6J3
TEL. 519 836 5692 FAX. 519 836 5226

PROMINENT FLUID CONTROLS INC.
RIDC PARK WEST
136 INDUSTRY DRIVE,
PITTSBURGH P.A., USA. 15275
TEL. 412 787 2484 FAX. 412 787 0704

DESIGNED	GJS	APPROVED	
DRAWN	GJS	SCALE	N.T.S.
CHECKED	JMS	DATE	10/09/06

DWG No	REV	PAGE
1028806-400	A	1/1