DWG No	REV
7740953-200	C

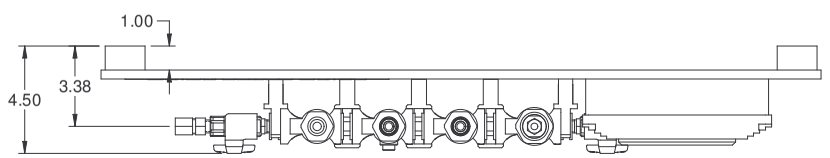

PLAN VIEW

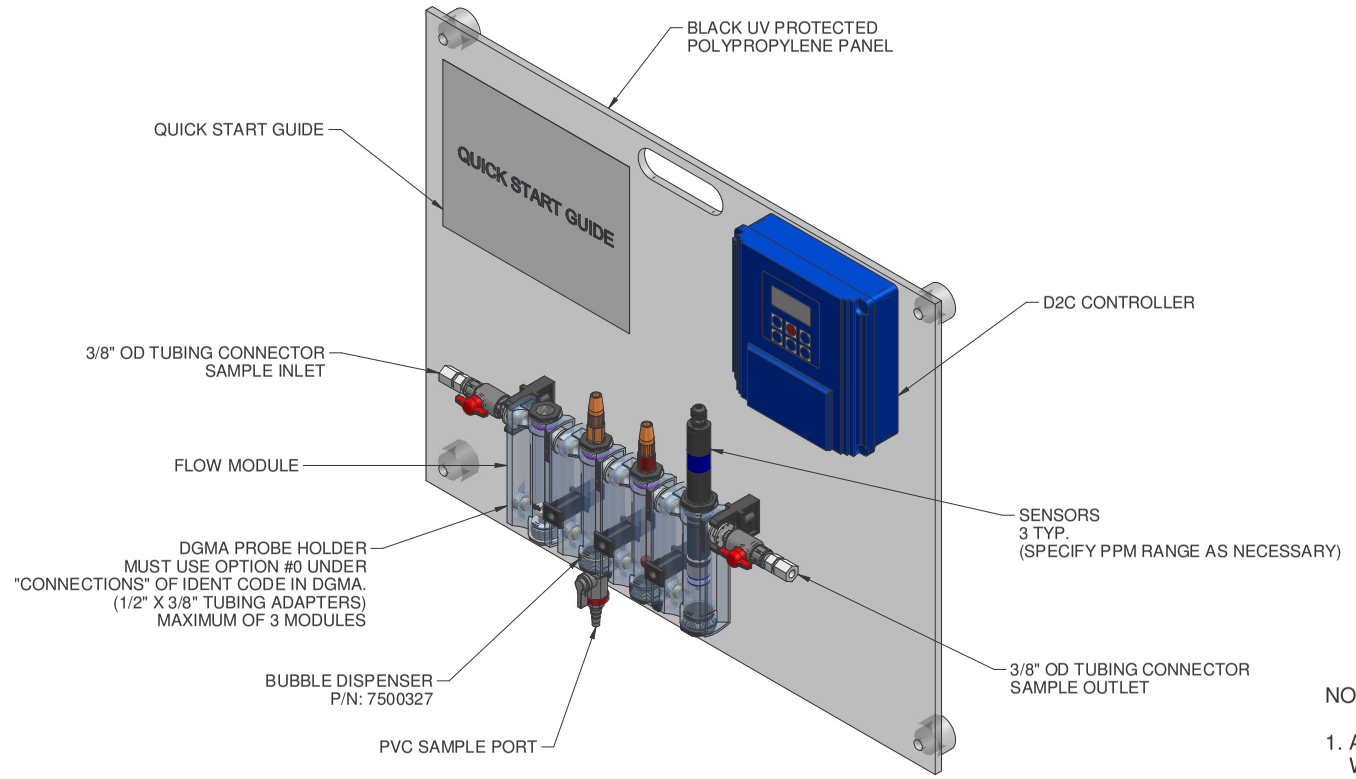

ISOMETRIC VIEW

NOTES:

1. ALL PIPING AND FITTINGS SHALL BE 1/4" SCH. 80 PVC SOCKET WELD WITH VITON SEALS UNLESS OTHERWISE REQUIRED BY COMPONENTS.
2. INLET AND OUTLET SHALL BE 3/8" TUBE FITTING. QTY. OF 30 FT. OF 3/8" PE TUBING TO SHIP LOOSE WITH PANEL.
3. SENSORS, DGMA & D2C TO BE ORDERED SEPERATELY.
4. ALL DIMENSIONS ARE IN INCHES AND ARE SHOWN FOR REFERENCE ONLY.

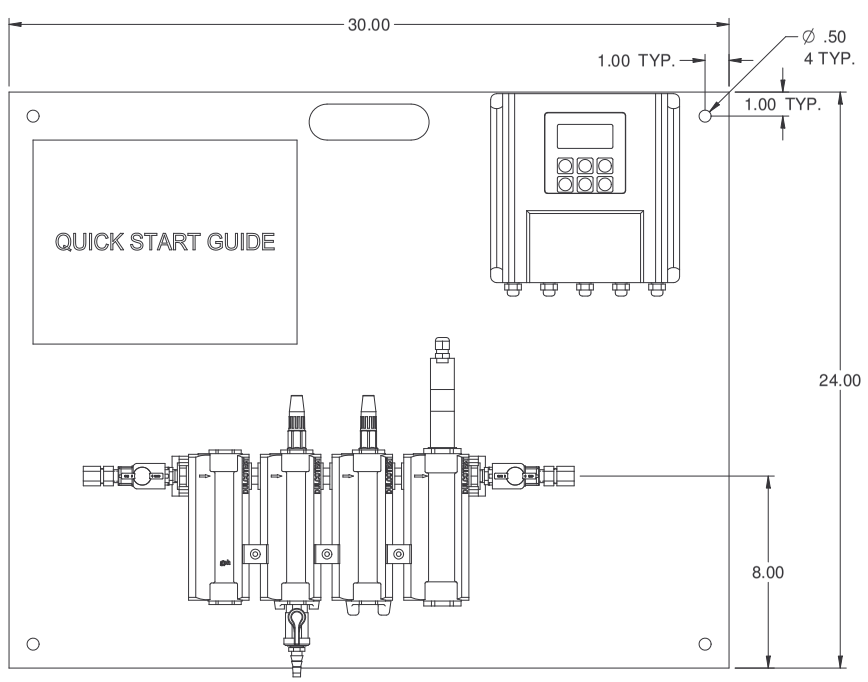

FRONT VIEW

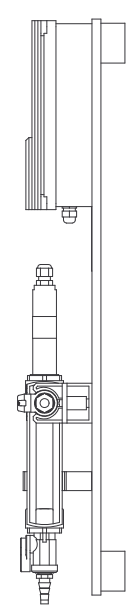

SIDE VIEW

REV	DATE	DESCRIPTION	BY	APPD	REVD
C	06/08/10	UPDATED BACK PANEL	JDB		

REVISIONS

CUSTOMER PROMINENT FLUID CONTROLS INC. (STANDARD CONTROL PACKAGE)

JOB No 7740953 | PURCHASE ORDER No N/A

TITLE D2C CONTROL PACKAGE (BASIC) GENERAL ARRANGEMENT

THIS DRAWING IS THE PROPERTY OF PROMINENT FLUID CONTROLS INC. AND SHALL NOT BE COPIED OR TRANSFERRED WITHOUT THE WRITTEN CONSENT OF PROMINENT FLUID CONTROLS INC.

ENGINEERS SEAL

ProMinent®
THE PROMINENT GROUP OF COMPANIES

PITTSBURGH, PA USA WWW.PROMINENT.US

PROMINENT FLUID CONTROLS LTD.
490 SOUTHGATE DRIVE.
GUELPH, ONTARIO, CANADA
N1H 6J3
TEL. 519 836 5692 FAX. 519 836 5226

PROMINENT FLUID CONTROLS INC.
RIDC PARK WEST
136 INDUSTRY DRIVE,
PITTSBURGH P.A., USA. 15275
TEL. 412 787 2484 FAX. 412 787 0704

DESIGNED	DTH	APPROVED	
DRAWN	DTH	SCALE	N.T.S.
CHECKED	RJB	DATE	04/02/00

DWG No	REV	PAGE
7740953-200	C	1/1